Ice Bike

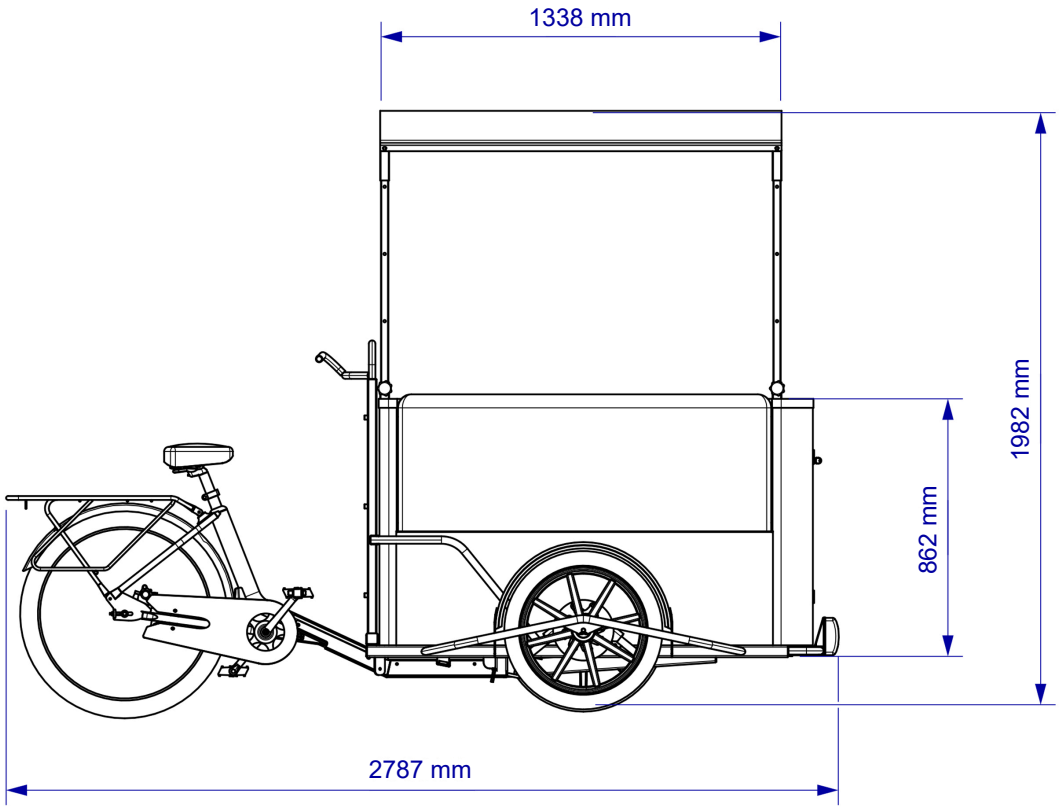

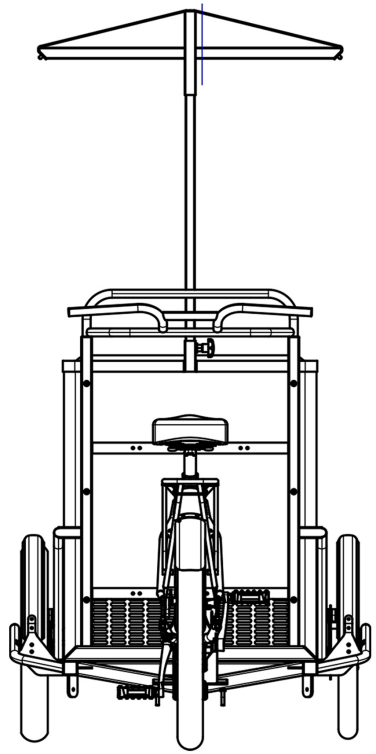

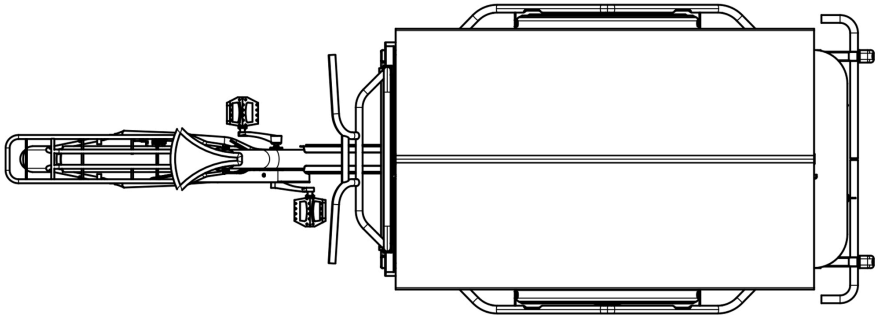

1. UP TO 10 HOURS OF FREEZING WITHOUT ELECTRICITY
2. FREEZER AHT RIO H 125 EUTECTIC – 271 LITRES CAPACITY

DIMENSIONS ARE IN MILLIMETERS.

Version: 10-26 Multiwagon

PRODUCT NAME :	Ice Bike

MULTIWAGON