Ice Bike Electric

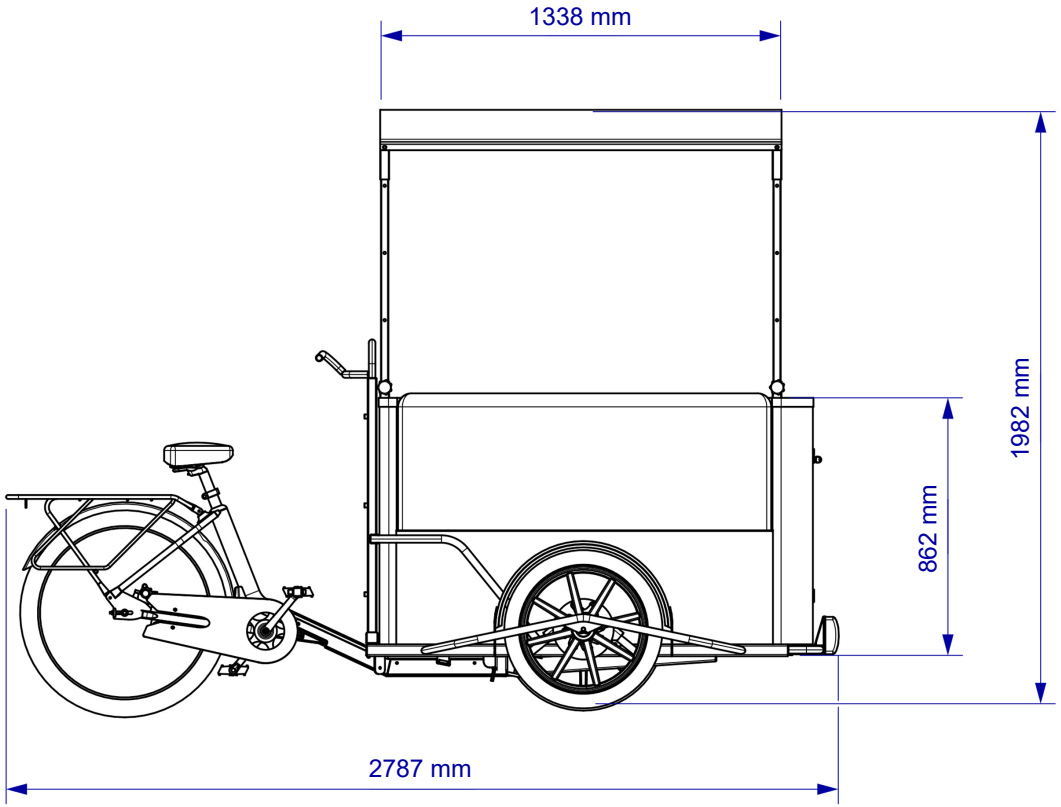

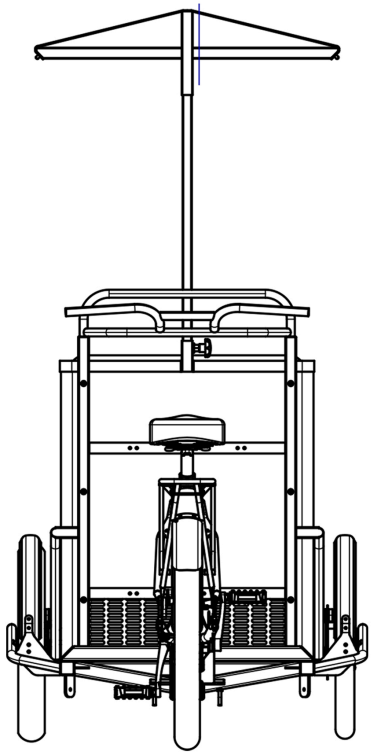

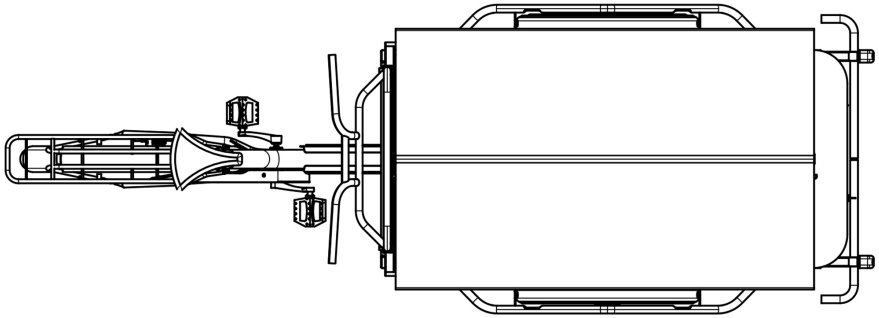

1. UP TO 10 HOURS OF FREEZING WITHOUT ELECTRICITY
2. FREEZER AHT RIO H 125 EUTECTIC – 271 LITRES CAPACITY
3. ELECTRIC PEDAL ASSISTANCE, 250W MOTOR WITH 113 Nm TORQUE
4. 1.4 kWh LiFePO4 BATTERY, RANGE APPROX. 45 TO 70 km
5. CHARGING VIA 230V IN APPROX. 6 TO 8 HOURS

DIMENSIONS ARE IN MILLIMETERS.

Version: 10-26 Multiwagon

PRODUCT NAME :	Ice Bike Electric

MULTIWAGON